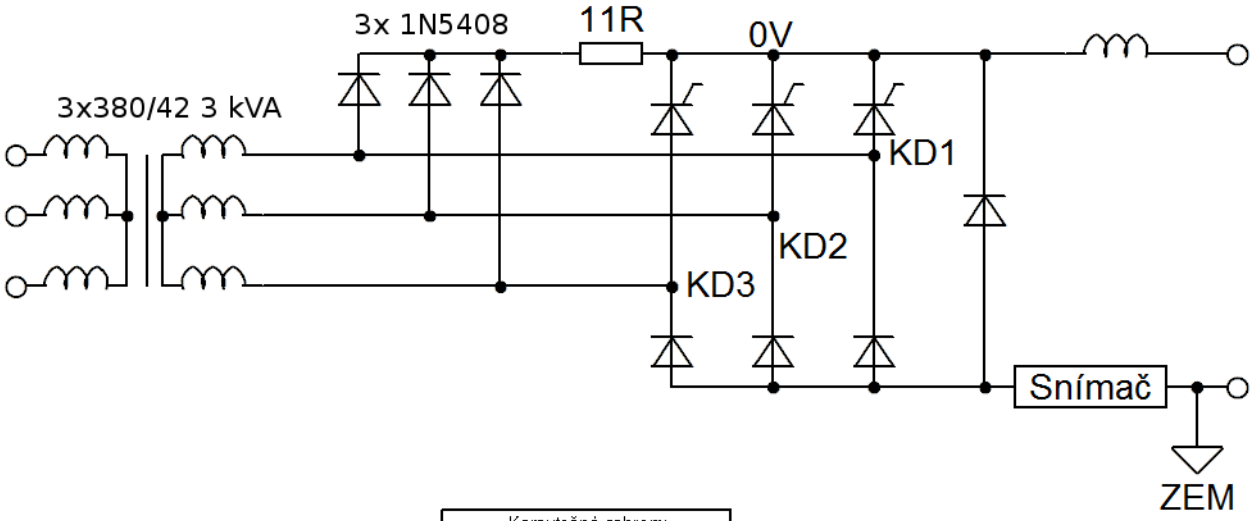
3x 1N5408
11R
0V
3x380/42 3 kVA
KD1
KD2
KD3
Snímač
ZEM

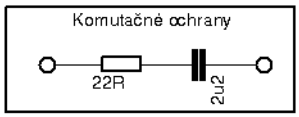
Komutačné ochrany
22R
2u2

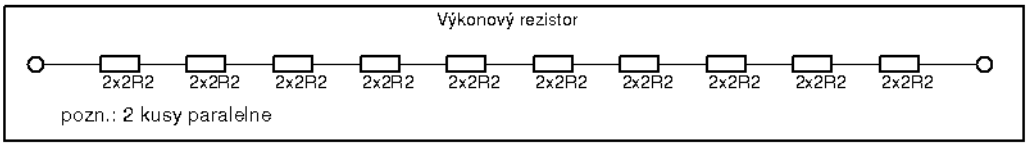
Výkonový rezistor
2x2R2
2x2R2
2x2R2
2x2R2
2x2R2
2x2R2
2x2R2
2x2R2
2x2R2
2x2R2
pozn.: 2 kusy paralelne

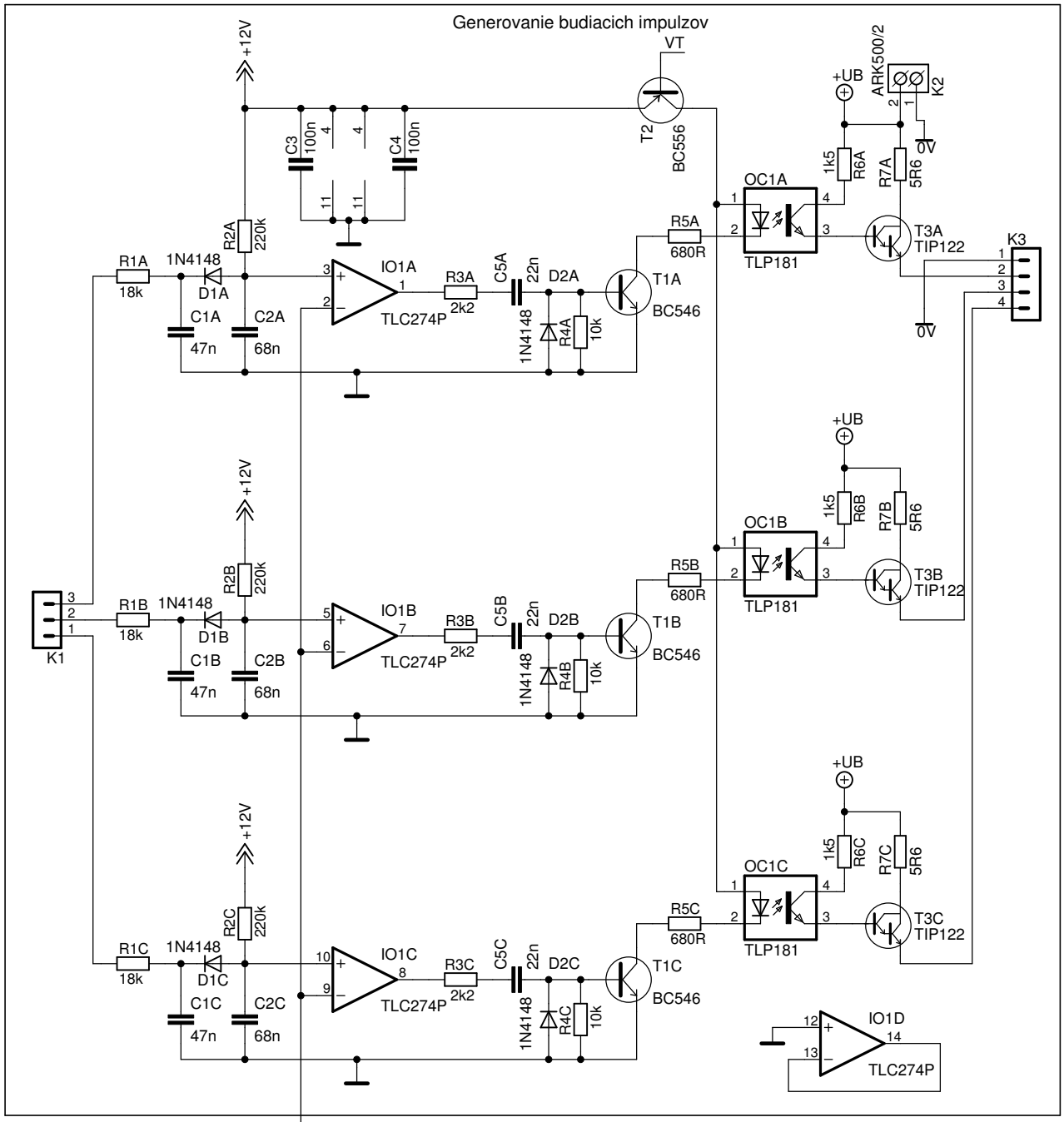
Generovanie budiacich impulzov
+12V
VT
T2
BC556
C3
100n
C4
100n
+UB
ARK500/2
K2
0V
1k5
R6A
R7A
5R6
OC1A
TLP181
T3A
TIP122
K3
R2A
220k
R1A
18k
1N4148
D1A
IO1A
TLC274P
R3A
2k2
C5A
22n
D2A
T1A
BC546
R5A
680R
C1A
47n
C2A
68n
1N4148
R4A
10k
R2B
220k
R1B
18k
D1B
IO1B
R3B
C5B
D2B
T1B
R5B
OC1B
R6B
R7B
T3B
C1B
C2B
R4B
K1
R2C
220k
R1C
18k
D1C
IO1C
R3C
C5C
D2C
T1C
R5C
OC1C
R6C
R7C
T3C
C1C
C2C
R4C
IO1D

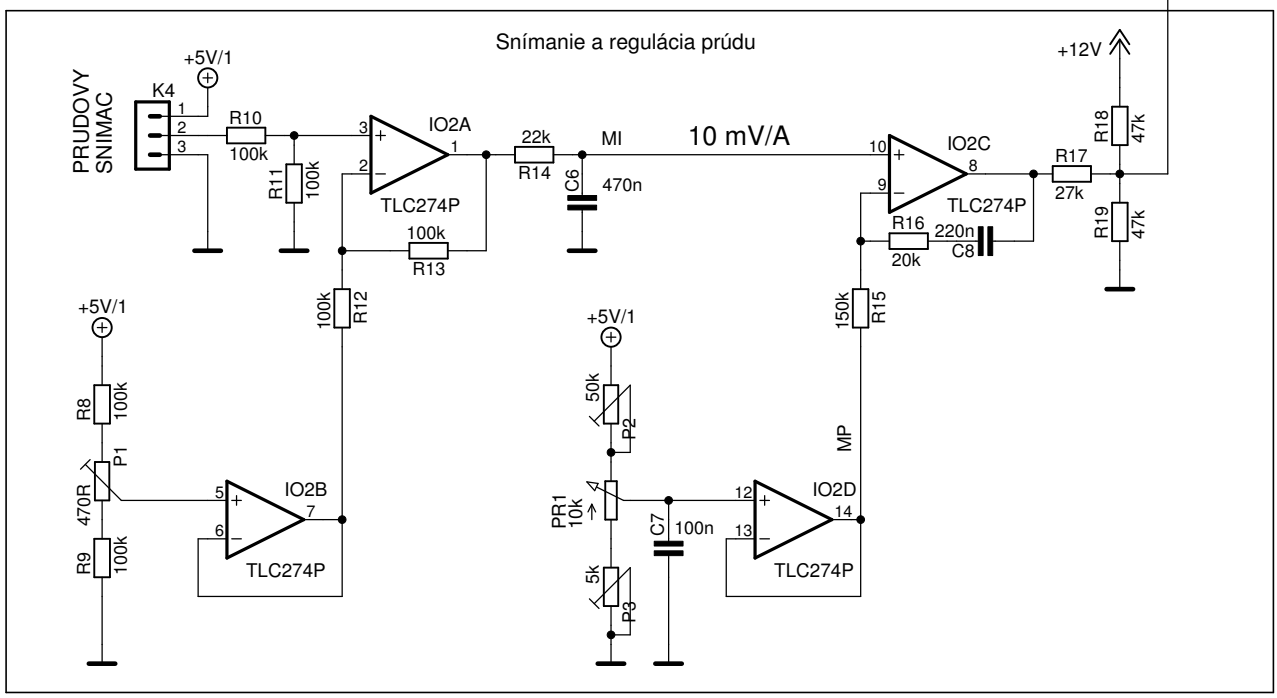
Snímanie a regulácia prúdu
PRUDOVY SNIMAC
K4
+5V/1
R10
100k
R11
100k
IO2A
TLC274P
22k
R14
MI
C6
470n
10 mV/A
IO2C
R17
27k
R18
47k
R19
47k
R16
20k
220n
C8
100k
R13
100k
R12
150k
R15
MP
R8
100k
P1
470R
R9
100k
IO2B
50k
P2
PR1
10k
C7
100n
5k
P3
IO2D

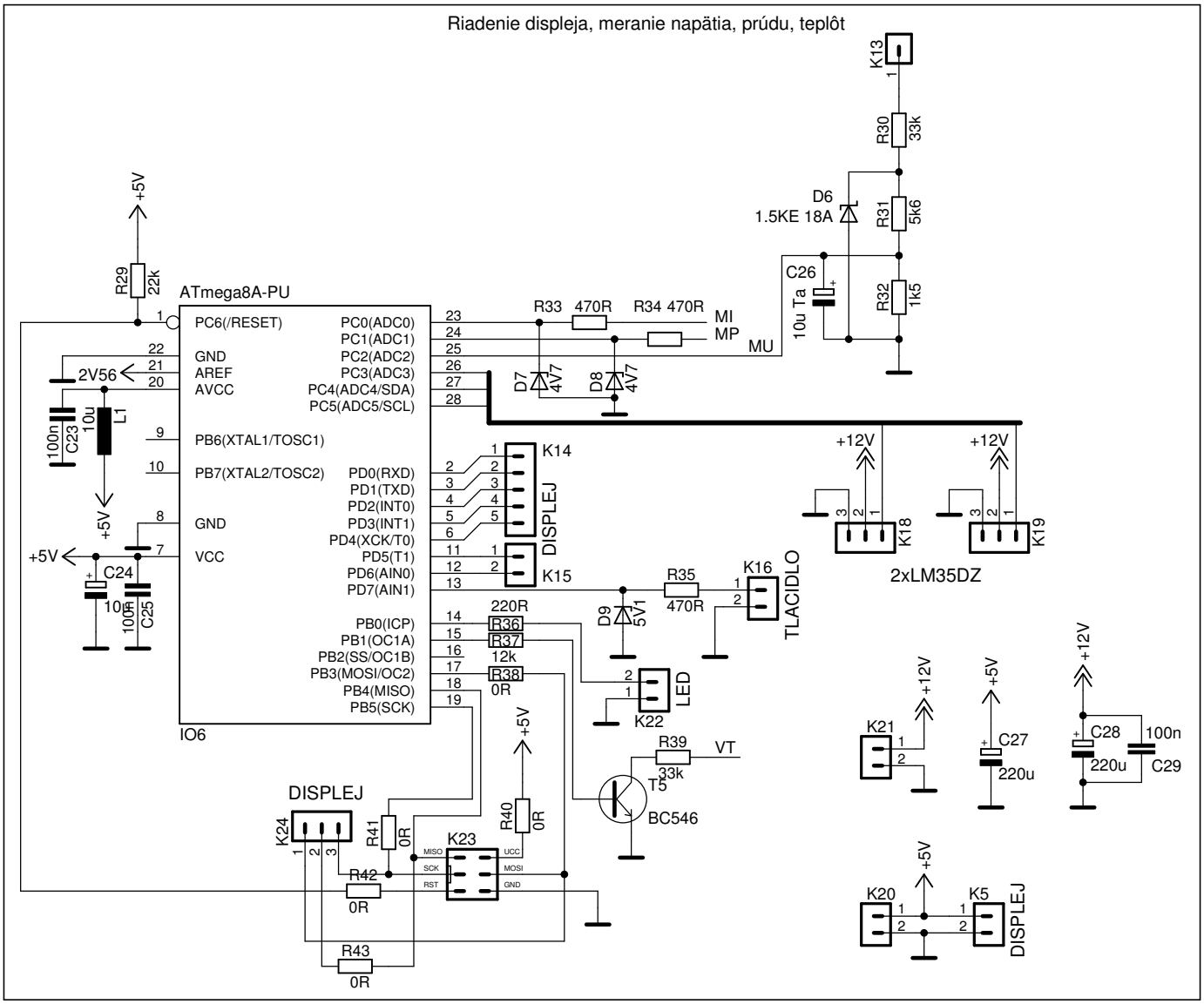
Riadenie displeja, meranie napätia, prúdu, teplôt
ATmega8A-PU
PC6(/RESET)
GND
AREF
AVCC
PB6(XTAL1/TOSC1)
PB7(XTAL2/TOSC2)
GND
VCC
PC0(ADC0)
PC1(ADC1)
PC2(ADC2)
PC3(ADC3)
PC4(ADC4/SDA)
PC5(ADC5/SCL)
PD0(RXD)
PD1(TXD)
PD2(INT0)
PD3(INT1)
PD4(XCK/T0)
PD5(T1)
PD6(AIN0)
PD7(AIN1)
PB0(ICP)
PB1(OC1A)
PB2(SS/OC1B)
PB3(MOSI/OC2)
PB4(MISO)
PB5(SCK)
IO6
+5V
R29 22k
2V56
L1
10u
C23 100n
C24 100n
C25 100n
R33 470R
R34 470R
MI
MP
MU
D7 4V7
D8 4V7
K13
R30 33k
D6 1.5KE 18A
R31 5k6
R32 1k5
C26 10u Ta
K14
K15
DISPLEJ
+12V
K18
K19
2xLM35DZ
R35 470R
K16
TLACIDLO
D9 5V1
R36 220R
R37 12k
R38 0R
K22
LED
R39 33k
VT
T5
BC546
K21
C27 220u
C28 220u
C29 100n
K24
DISPLEJ
R41 0R
R40 0R
K23
MISO
SCK
RST
UCC
MOSI
GND
R42 0R
R43 0R
K20
K5
DISPLEJ

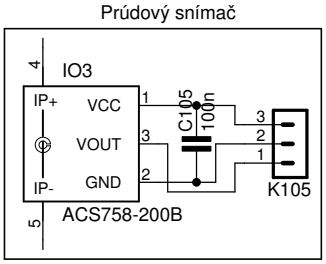
Prúdový snímač
IO3
IP+
IP-
VCC
VOUT
GND
ACS758-200B
C105 100n
K105

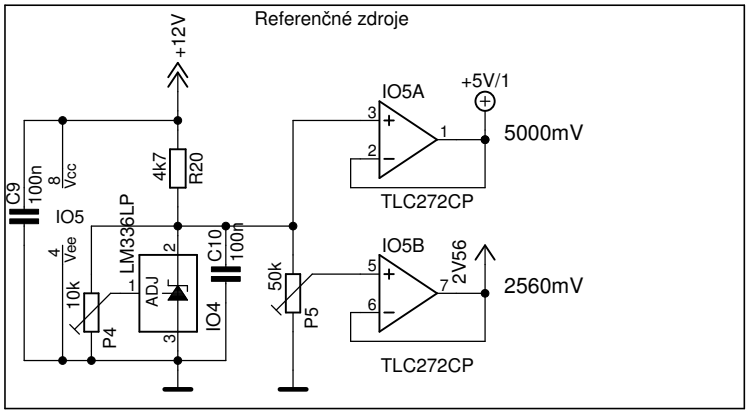
Referenčné zdroje
+12V
C9 100n
IO5
LM336LP
ADJ
Vcc
Vee
10k P4
4k7 R20
C10 100n
IO4
50k P5
IO5A
+5V/1
5000mV
TLC272CP
IO5B
2V56
2560mV
TLC272CP

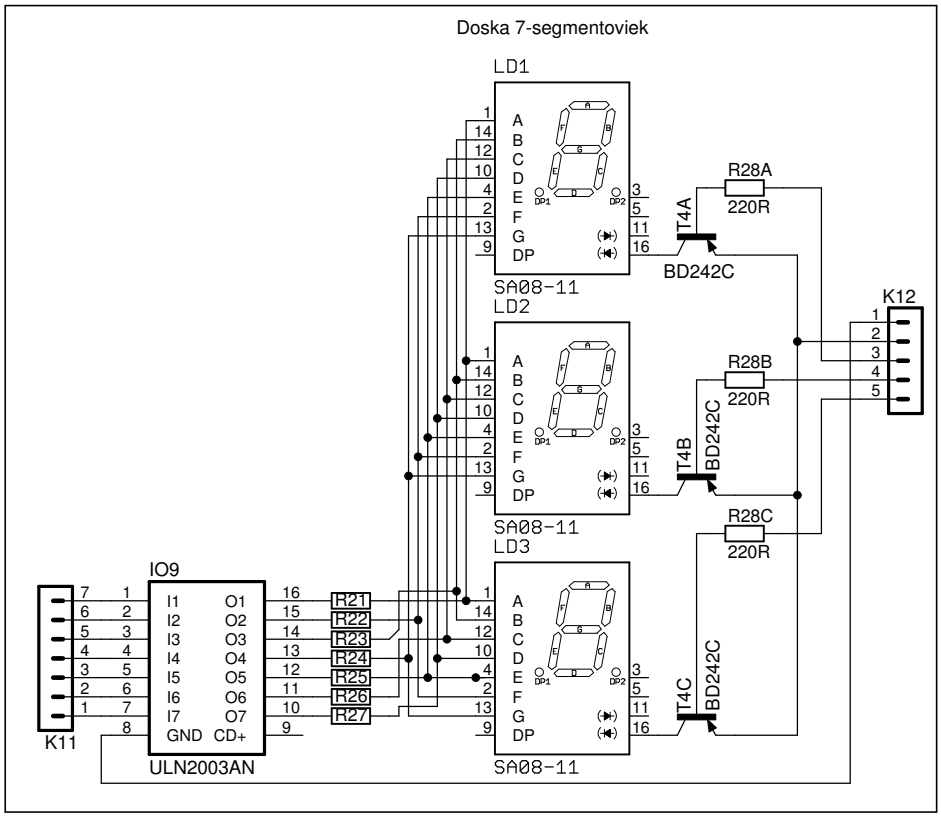
Doska 7-segmentoviek
LD1
SA08-11
LD2
SA08-11
LD3
SA08-11
R28A
220R
R28B
220R
R28C
220R
T4A
BD242C
T4B
BD242C
T4C
BD242C
K12
IO9
ULN2003AN
K11
R21
R22
R23
R24
R25
R26
R27

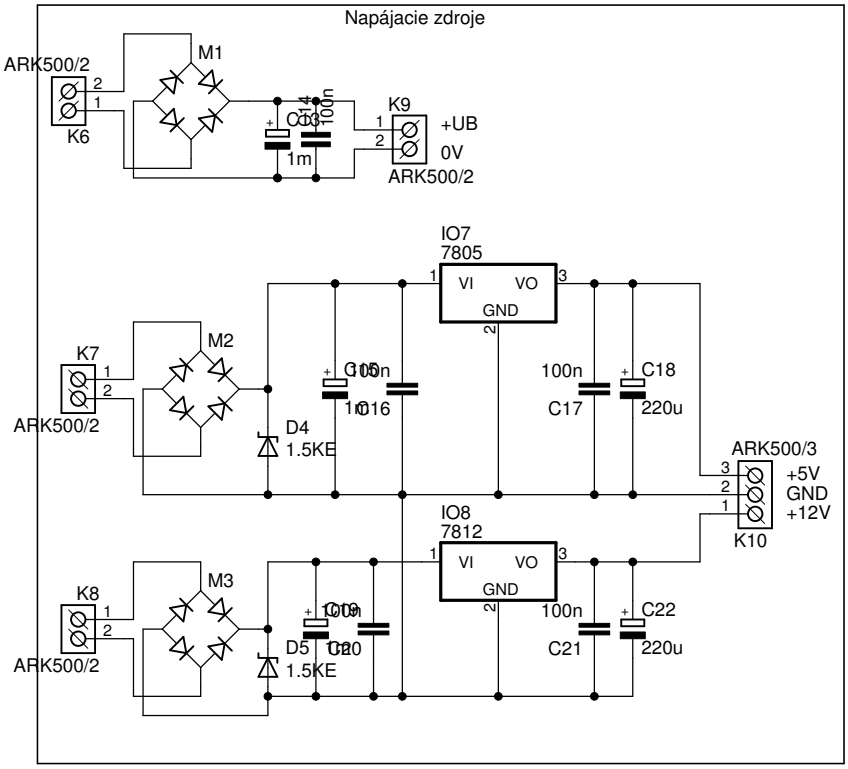
Napájacie zdroje
ARK500/2
K6
M1
C14
100n
C13
1m
K9
+UB
0V
ARK500/2
IO7
7805
VI
VO
GND
K7
ARK500/2
M2
C15
100n
C16
1m
D4
1.5KE
100n
C17
C18
220u
ARK500/3
+5V
GND
+12V
K10
IO8
7812
K8
ARK500/2
M3
C19
100n
C20
1m
D5
1.5KE
100n
C21
C22
220u